ARM® Cortex®-M

32-bit Microcontroller

NuMotor series
User's Manual

NUMOTOR USER MANUAL

The information described in this document is the exclusive intellectual property of Nuvoton Technology Corporation and shall not be reproduced without permission from Nuvoton.

Nuvoton is providing this document only for reference purposes of NuMicro® microcontroller based system design. Nuvoton assumes no responsibility for errors or omissions.

All data and specifications are subject to change without notice.

For additional information or questions, please contact: Nuvoton Technology Corporation.

www.nuvoton.com

TABLE OF CONTENTS

1. Introduction 3
2. Control methods 3
   2.1. Description of control methods 3
   2.2. Control method switching 3
3. Command Mode Switching 4
   3.1. VSP control mode 4
   3.2. UART control mode 4
4. Motor parameter setting 4
5. Current feedback circuit parameters 5
6. PI controller parameters 6
7. Description of current feedback 7
   7.1. Driver circuit 7
   7.2. Current feedback circuit 7
8. HALL sensor signal measurement description 8
   8.1. Description of phase voltage measurement 8
   8.2. Hall sensor signal correction 8

1. Introduction

This manual explains how to use the NuMotor example code, including how to switch between different control modes, the key parameters to be changed, and the external feedback circuit.

2. Control methods

2.1. Description of control methods

This example program contains the following control methods

I. FOC 1R : Magnetic Field Oriented Control, 1 shunt resistor is used for total current feedback.

II. FOC 2R : magnetic field orientation control, using two shunt resistors to feedback two-phase currents.

III. Six step square wave control(open loop) : open loop control (adjustment of duty command)

IV. Six step square wave control(close loop) : closed loop control (adjustment of speed command)

2.2. Control method switching

The example program will separate the control methods by #define. You can switch between different control methods by modifying the code in system_parameter.h. The following is an example.

I. FOC & SIX_STEP control switch : Corresponding control method. If define is 1, then the function is enabled; if 0, then it is disabled.

```
#define    P_FOC_CONTROL          1   // 1 : for P_FOC_CONTROL
#define    P_SIX_STEP_CONTROL     0   // 1 : for P_SIX_STEP_CONTROL
```

II. SIX_STEP control OPEN_LOOP & CLOSE_LOOP : 1 for On, 0 for Off

```
#define P_SIX_STEP_OPEN_LOOP        1
#define P_SIX_STEP_CLOSE_LOOP       0
```

III. FOC control 1R & 2R : Cancels the comment of the function you want to enable (//). Then turn on the mapping function.

```
#define    P_1R_FOC        //For the system is 1R FOC
//#define  P_2R_FOC        //For the system is 2R FOC
```

3. Command Mode Switching

There are two types of control modes: VSP(external knob) and UART(Through the GUI).

3.1. VSP control mode

When the external knob (VSP) voltage is less than 2.5V when the system is initialized, the system issues the switch and speed control commands to the system via VSP

3.2. UART control mode

When the external knob (VSP) voltage is greater than 2.5V when the system is initialized, the system is commanded by UART to the system. Through the exclusive GUI, you can command the system and adjust parameters in time.

4. Motor parameter setting

When changing to a different motor, you need to change the following parameters according to the actual motor specification. The more critical parameters are listed in this section, and the detailed parameters are also described in the .h file.

I. Number of motor pole

```
#define    C_MOTOR_POLE        4    //Unit: Number of motor pole
```

II. Maximum rotor speed

```
#define    C_MAX_MOTOR_SPEED 3000   //Unit: rpm, maximum rotor speed.
```

III. Calculate the average rotation speed when the rotation speed is greater than the number of rpm.

```
#define    C_RPM_Do_Speed_Average    300    //Unit: rpm, When rotor speed is over it --> Do speed average.
```

IV. When using external VSP for speed command, set the maximum and minimum values of the command, and the minimum value is the starting speed of the motor.

```
#define    C_MAX_CMD_SPEED_rpm    3000    //Unit: rpm
#define    C_MIN_CMD_SPEED_rpm    200     //Unit: rpm
```

V. Hall sensor type : divided into type 0 and type 1, difference. as follows

type 0 : The rising edge of Hall U is aligned with the minimum voltage of U phase

type 1 : The rising edge of Hall U is aligned with the maximum voltage of U phase

```
#define    HALL_TYPE    1
```

5. Current feedback circuit parameters

The phase current and total current of the system are fed back to the MCU via an external OPA. The corresponding parameters are as follows

I. When the system is FOC 2R control, corresponding phase resistance parameter

```
#ifdef P_2R_FOC
    #define    SHUNT_R_mOhm   100    //Shunt R, unit=mohm
#endif
```

II. When the system is FOC 1R control, corresponding phase resistance parameter

```
#ifdef P_1R_FOC
    #define    SHUNT_R_mOhm   50     //Shunt R, unit=mohm
#endif
```

III. Gain of external OPA

```
#define    OP_Amp    5    //gain of OP-amp.
```

6. PI controller parameters

I. Current loop parameter, the format is Q31

```
#define    C_I_Kp     (5000)
#define    C_I_Ki     (1000)/1
```

II. Speed loop parameter, the format is Q31

```
#define    C_SP_Kp    983040/8
#define    C_SP_Ki    3276/10*2
```

7. Description of current feedback

7.1. Driver circuit

The following figure is the motor driver circuit used in this example program. The current feedback is to detect the voltage on the phase resistance Rp

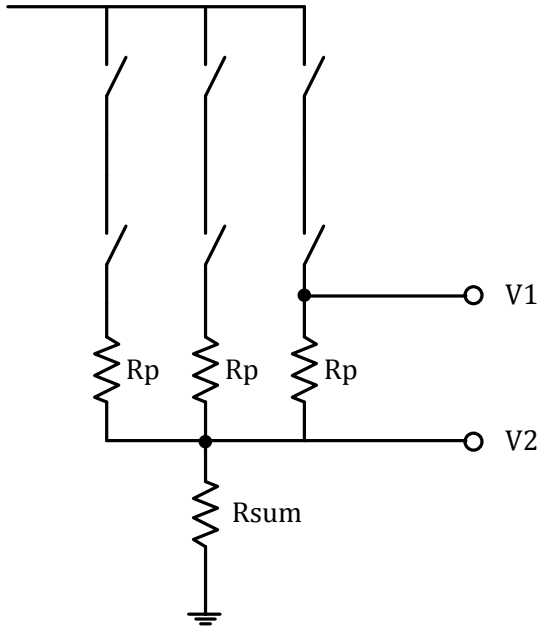

7.2. Current feedback circuit

Because the motor current is an AC value, the current feedback circuit needs to be leveled up and then amplified. The ratio can be calculated by adjusting the ratio of each resistor. The user can adjust the ratio according to the maximum current of the actual system. When the maximum current occurs, Vo does not exceed the VDD voltage of the MCU

If $\frac{R4}{R3} = \frac{R2}{2 \times R1} = G_v$

Then $V_o = G_v \times (V_1 - V_2) + 2.5$

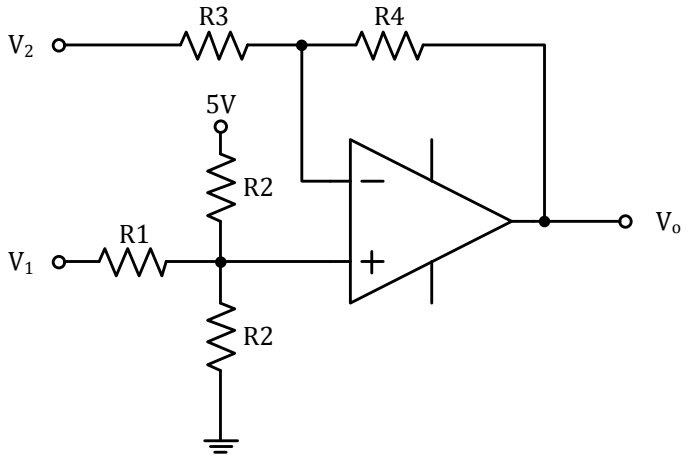

8. HALL sensor signal measurement description

Before operating the motor, it is necessary to confirm the correspondence between the Hall sensor signal and the back EMF. The following is an explanation of the phase voltage measurement

8.1. Description of phase voltage measurement

Connect the three wires of the motor to the external resistor, connect them into Y-connections, connect the positive end of the probe to the motor outlet, connect the negative end to the common point, manually turn the motor or external prime mover can measure the phase voltage.

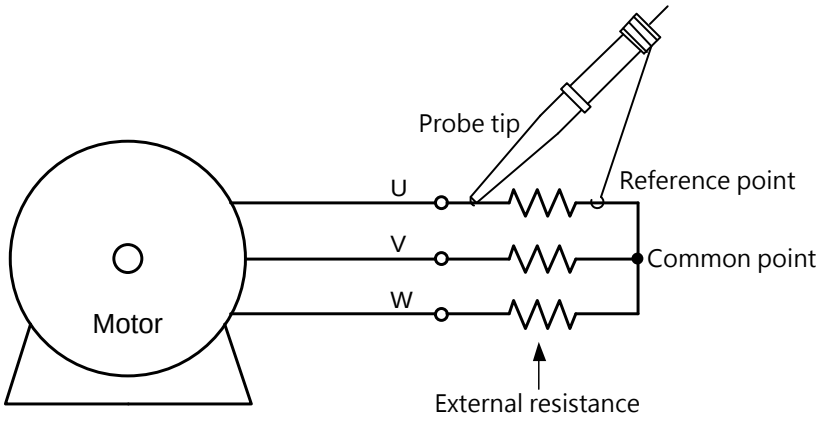

8.2. Hall sensor signal correction

This example program divides the type of hall sensor signal into type 0 and type 1, as shown in the following figure, as shown in the figure below, type 0 is the minimum of the rising edge of the hall sensor signal to align the motor phase voltage, and type 1 is the minimum of the rising edge of the hall sensor signal to align the motor phase Maximum voltage.

The correction method is Hall U aligns U phase voltage, Hall V aligns V phase voltage, Hall W aligns W phase voltage

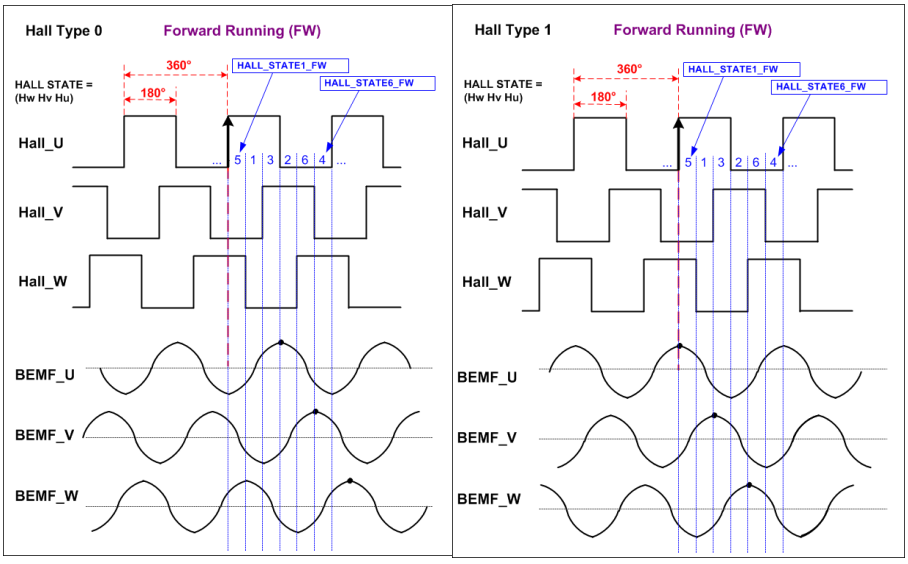

Important Notice

Nuvoton Products are neither intended nor warranted for usage in systems or equipment, any malfunction or failure of which may cause loss of human life, bodily injury or severe property damage. Such applications are deemed, "Insecure Usage".

Insecure usage includes, but is not limited to: equipment for surgical implementation, atomic energy control instruments, airplane or spaceship instruments, the control or operation of dynamic, brake or safety systems designed for vehicular use, traffic signal instruments, all types of safety devices, and other applications intended to support or sustain life.

All Insecure Usage shall be made at customer's risk, and in the event that third parties lay claims to Nuvoton as a result of customer's Insecure Usage, customer shall indemnify the damages and liabilities thus incurred by Nuvoton.

Please note that all data and specifications are subject to change without notice.
All the trademarks of products and companies mentioned in this datasheet belong to their respective owners.